Work Order ID 51832

September 4, 2009 9:48:53 AM

Item ID: D3846-7
Revision ID: B
Item Name: GASKET

Accept

Setup Start
Stop

Start Date: 09/04/2009 **Start Qty:** 4.00
Required Date: 09/11/2009 **Req'd Qty:** 4.00
Reference:

Cust Item ID:
Customer:

Run Start
Stop

Approvals: **Process Plan:** MF **Date:** 09-09-09 **Tooling:** _____ **Date:** _____
QC: _____ **Date:** _____ **SPC (Y/N):** _____ **Date:** _____

Sequence ID/ Work Center ID	Operation Description	Set Up/ Run Hours	Draw Number	Draw Rev.	Plan Code	Accept Qty	Reject Qty	Reject Number	Insp. Stamp
Draw Nbr / **Revision Nbr**									
D3846 / B									
100		0.00							
Waterjet	**Memo**	0.00							
FLOW CNC Waterjet	1-Cut as per Dwg D3846 Dwg Rev: B Prog Rev: B 2-Deburr if necessary								
110	QC2- Inspect parts off machine FAI/FAIB	0.00							
QC	**Memo**	0.00							
Quality Control									

Pb 7

BB 9-9-10

BB 9-9-10

Dart Aerospace Ltd

W/O:		WORK ORDER CHANGES					
DATE	STEP	PROCEDURE CHANGE	By	Date	Qty	Approval Chief Eng / Prod Mgr	Approval QC Inspector

Part No: D 3846-7 PAR #: _____ Fault Category: Engineering NCR: (Yes) No DQA: _____ Date: 05-05-16

Resolution: re-work Disposition: ~~use as is~~ Re-work QA: N/C Closed: _____ Date: 05-05-16

NCR: 51832		WORK ORDER NON-CONFORMANCE (NCR)						
DATE	STEP	Description of NC Section A	Corrective Action Section B: Initial Chief Eng	Action Description Chief Eng	Sign & Date	Verification Section C	Approval Chief Eng	Approval QC Inspector
9/9/10	100	All 6 gaskets were cut with the Rod 0.219" hole (Drain hole) in wrong location, a 1/2" off from 0.39".	DSIMR	As per Email from Roberto to Linda it is acceptable to just add a 0.219" hole in the correct location. -Roberto to Fix DXF.	BS 9-9-10	02-10-14	DSIMR	09/09/10
		R4 DXF was wrong	DSIMR	(email is attached for Ref. Last Page)	Mr 09/09/14	02/02/14	DSIMR	

NOTE: Date & initial all entries

H:\FORMS\Quality Assurance\approved QA\NCRWO RevE

Work Order ID 51832

September 4, 2009 9:48:53 AM

Item ID: D3846-7
Revision ID: B
Item Name: GASKET

Accept

Setup **Start**
Stop

Start Date: 09/04/2009 **Start Qty:** 4.00
Required Date: 09/11/2009 **Req'd Qty:** 4.00
Reference:

Cust Item ID:
Customer:

Run **Start**
Stop

Approvals: **Process Plan:** _____ **Date:** _____ **Tooling:** _____ **Date:** _____
QC: _____ **Date:** _____ **SPC (Y/N):** _____ **Date:** _____

Sequence ID/ Work Center ID	Operation Description	Set Up/ Run Hours	Draw Number	Draw Rev.	Plan Code	Accept Qty	Reject Qty	Reject Number	Insp. Stamp
120	QC8- Inspect parts - second check	0.00							
QC	Memo	0.00							
Quality Control									
130	Identify as per dwg & Stock Location: PP	0.00							
Packaging	Memo	0.00							
Packaging									
140	QC21- Final Inspection - Work Order Release	0.00							
QC	Memo	0.00							
Quality Control									

2) Sorlorky

(40) ∅

9/9/14 (Box) SD

09/09/15

BP 09-9-15

Picklist Print

September 4, 2009 9:48:53 AM

Work Order ID: 51832

Parent Item: D3846-7RevB

Parent Item Name: GASKET

Comments:

Start Date: 09/04/2009 **Required Date:** 09/11/2009

Start Qty: 4.00 **Required Qty:** 4.00

Component Item ID/ Item Name	Replacement Item ID	Mfg/ Purch	Bin Item	Primary Location	Last Location	Route Seq ID	Unit of Measure	Qty on Hand	Remaining Qty To Pick	Qty Issued	Date Issued	Status
MNEO60S.063 NEOPRENE SHEET 0.063		Purchased	No			100	sf	496.5411	5.3221		9-9-10	

Warehouse Location	Loc Qty	Loc Code
Main Warehouse		
MAT	496.5410585	
111469	71.1	
111853	96.7589585	
112508	328.6821	

N/A

112508

DART AEROSPACE LTD	Work Order:	S1837
Description: GASKET	Part Number:	D3846-7
Inspection Dwg: D3846-7 Rev: B		Page 1 of 1

FIRST ARTICLE INSPECTION CHECKLIST

[X] First Article [ ] Prototype

Drawing Dimension	Tolerance	Actual Dimension	Accept	Reject	Method of Inspection	Comments
.300 X .300	+/- .010	.306 X .303	✓			
Ø .219	+.005 -.001	.220	✓			
2.39	+/- .030	2.39	✓			
3.20	+/- .030	3.194	✓			
4.02	+/- .030	4.004	✓			
1.69	+/- .030	1.697	✓			
12.74	+/- .030	12.74	✓			
25.48	+/- .030	25.48	✓			
28.98	+/- .030	28.98	✓			
38.15	+/- .030	38.15	✓			
41.65	+/- .030	41.65	✓			
6.32	+/- .030	6.82	✓	✓		See e-mail attached in NCR
10.00	+/- .030	10.00	✓			
20.00	+/- .030	20.00	✓			
30.00	+/- .030	30.00	✓			
45.28	+/- .030	45.25	✓			
.063	+/- .010	.064	✓			

Measured by:	JB	Audited by:		Prototype Approval:	N/A
Date:	9-9-10	Date:	02/09/14	Date:	N/A

Rev	Date	Change	Revised by	Approved
A		New Issue	KJ/JLM	

D3846-1 GASKET

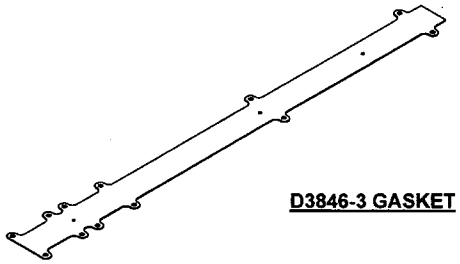

D3846-3 GASKET

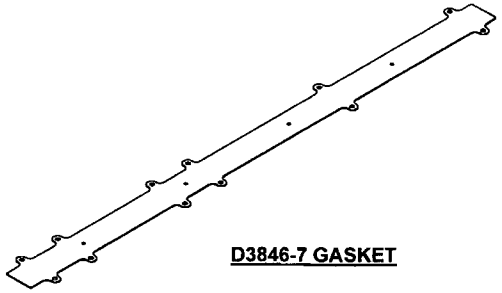

D3846-7 GASKET

SHOP COPY
RETURN TO
ENGINEERING
UNCONTROLLED COPY
SUBJECT TO AMENDMENT
WITHOUT NOTICE
WORK ORDER
NO. 51832

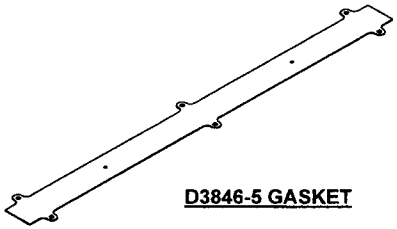

D3846-5 GASKET

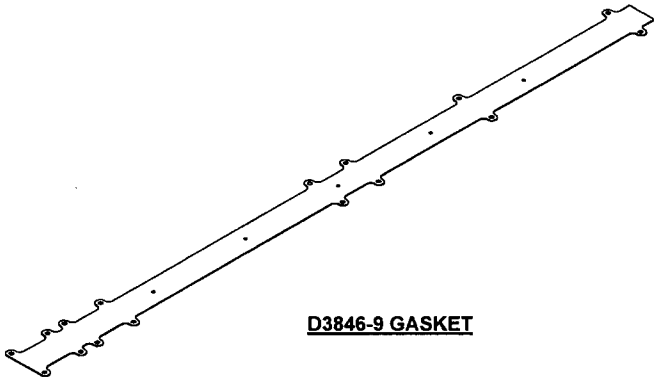

D3846-9 GASKET

D3846-11 GASKET

RELEASED
09/07/15 AM

NOTES:
1) MATERIAL: BLACK NEOPRENE SHEET, 0.063 THICK, 60 DUROMETER
(REF. DART SPEC. M-NEO60-S.063)
2) FINISH: NONE
3) TOLERANCES: PER DART QSI 018 UNLESS OTHERWISE NOTED
4) UNITS: INCHES UNLESS OTHERWISE NOTED
5) BREAK SHARP EDGES: N/A
6) IDENTIFICATION: IDENTIFY WITH DART P/N "D3846-X" USING YELLOW PAINT MARKER
7) WEIGHT:
D3846-1 = 0.03 lbs
D3846-3 = 0.25 lbs
D3846-5 = 0.20 lbs
D3846-7 = 0.26 lbs
D3846-9 = 0.35 lbs
D3846-11 = 0.04 lbs

REV.	DESCRIPTION	BY	DATE
B	5.82 WAS 6.25 (ZN C4-2); 45.28 WAS 45.71 (ZN A4-3); 6.32 WAS 6.75 (ZN B2-3)	RF	09.06.30
A	NEW ISSUE	RF	09.03.30

DESIGN	RF	DART AEROSPACE USA, INC. PORT HADLOCK, WA	
DRAWN	RF		
CHECKED		DRAWING NO. D3846	REV. B SHEET 1 OF 4
MFG. APPR.			
APPROVED		TITLE GASKET	SCALE NTS
DE APPR.			
DATE	09.06.30		

COPYRIGHT © 2009 BY DART AEROSPACE USA, INC.
THIS DOCUMENT IS PRIVATE AND CONFIDENTIAL AND IS SUPPLIED ON THE EXPRESS CONDITION THAT IT IS NOT TO BE USED FOR ANY PURPOSE OR COPIED OR COMMUNICATED TO ANY OTHER PERSON WITHOUT WRITTEN PERMISSION FROM DART AEROSPACE USA, INC

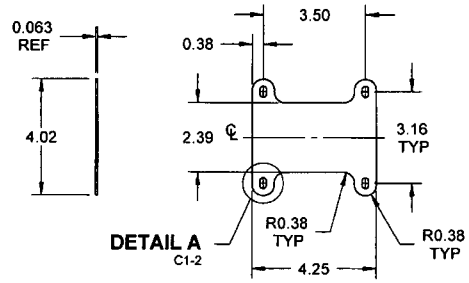

D3846-1 GASKET

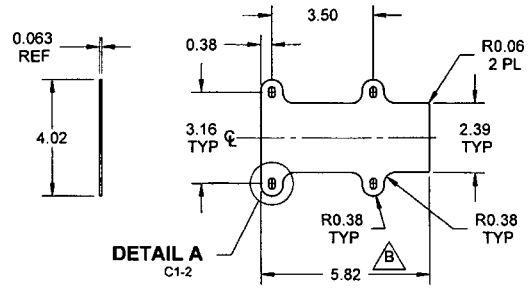

D3846-11 GASKET

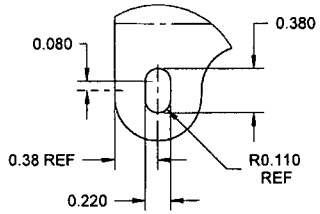

DETAIL A C5-2 C7-2
TYP, SCALE 4X

51832

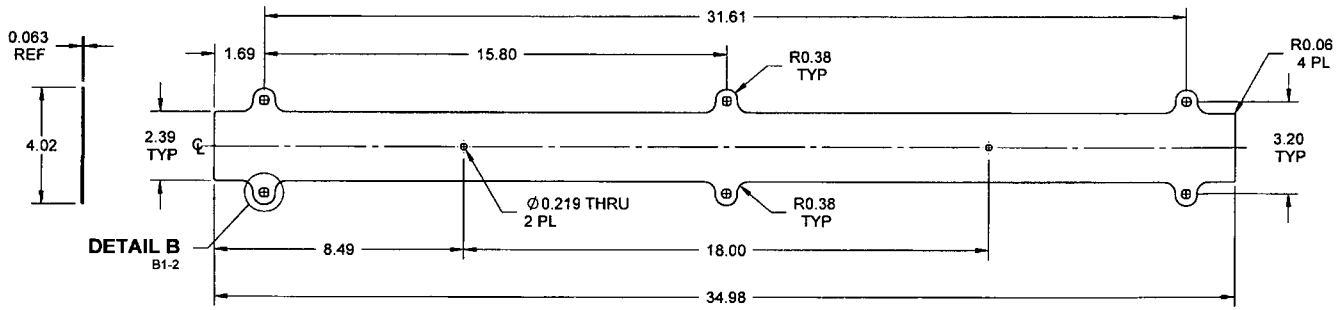

D3846-5 GASKET

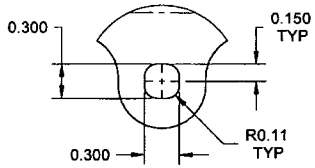

DETAIL B A7-2 C5-3 B7-3 C5-4
TYP, SCALE 4X

RELEASED
09/07/15

DESIGN	RF	**DART AEROSPACE USA, INC.** PORT HADLOCK, WA
DRAWN	RF	
CHECKED		DRAWING NO. D3846 — REV. B — SHEET 2 OF 4
MFG. APPR.		
APPROVED		TITLE GASKET — SCALE NTS
DE APPR.		
DATE	09.06.30	

COPYRIGHT © 2009 BY DART AEROSPACE USA, INC.
THIS DOCUMENT IS PRIVATE AND CONFIDENTIAL AND IS SUPPLIED ON THE EXPRESS CONDITION THAT IT IS NOT TO BE USED FOR ANY PURPOSE OR COPIED OR COMMUNICATED TO ANY OTHER PERSON WITHOUT WRITTEN PERMISSION FROM DART AEROSPACE USA, INC.

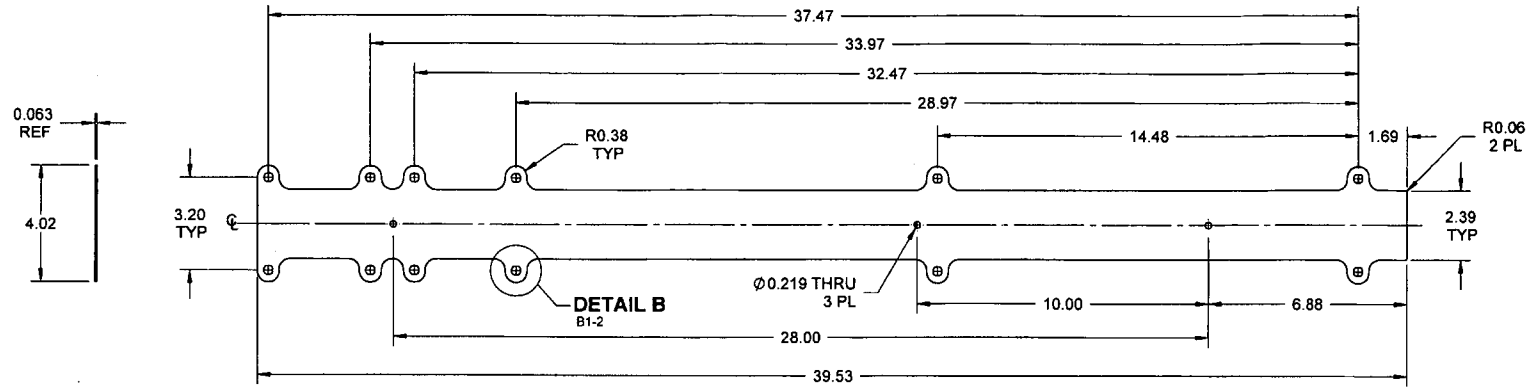

D3846-3 GASKET

51832

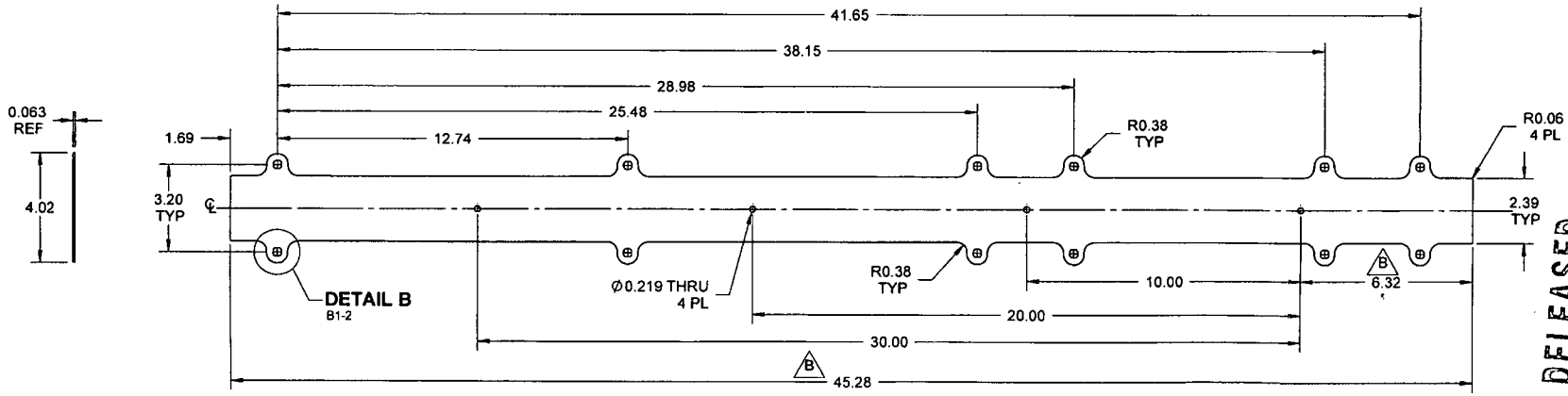

D3846-7 GASKET

RELEASED

DESIGN	RF	DART AEROSPACE USA, INC. PORT HADLOCK, WA
DRAWN	RF	
CHECKED		DRAWING NO. D3846 — REV. B — SHEET 3 OF 4
MFG. APPR.		
APPROVED		TITLE GASKET — SCALE NTS
DE APPR.		
DATE	09.06.30	

COPYRIGHT © 2009 BY DART AEROSPACE USA, INC.
THIS DOCUMENT IS PRIVATE AND CONFIDENTIAL AND IS SUPPLIED ON THE EXPRESS CONDITION THAT IT IS NOT TO BE USED FOR ANY PURPOSE OR COPIED OR COMMUNICATED TO ANY OTHER PERSON WITHOUT WRITTEN PERMISSION FROM DART AEROSPACE USA, INC.

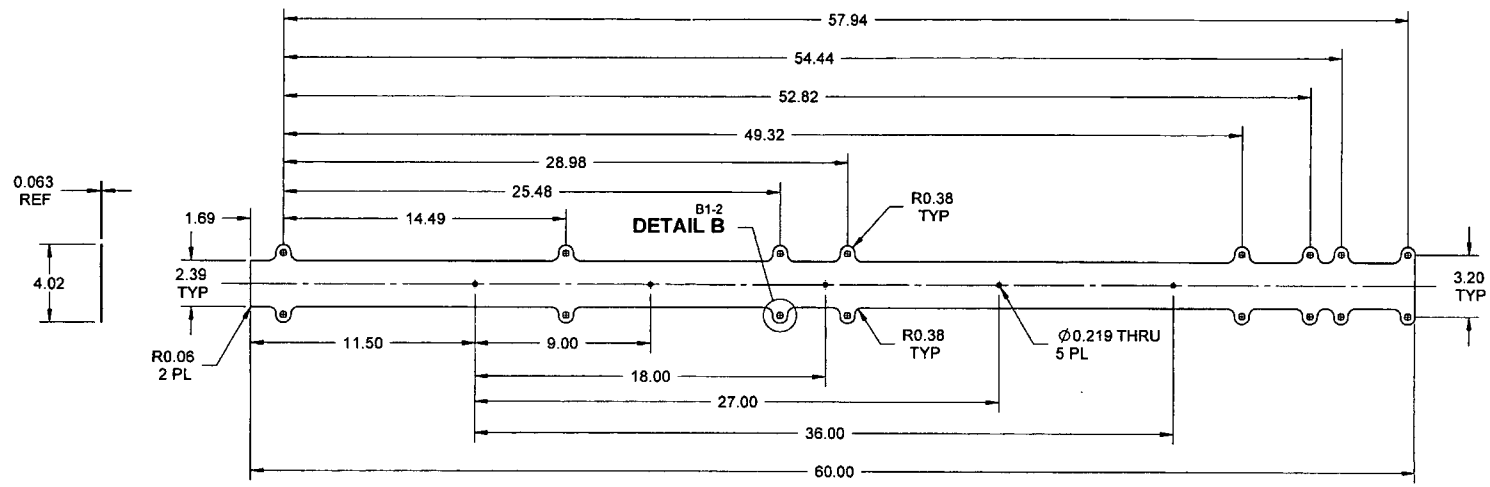

D3846-9 GASKET

51832

RELEASED 09/07/15

DESIGN	RF	**DART AEROSPACE USA, INC.** PORT HADLOCK, WA
DRAWN	RF	
CHECKED		DRAWING NO. D3846 — REV. B — SHEET 4 OF 4
MFG. APPR.		
APPROVED		TITLE GASKET — SCALE NTS
DE APPR.		
DATE	09.06.30	

COPYRIGHT © 2009 BY DART AEROSPACE USA, INC.
THIS DOCUMENT IS PRIVATE AND CONFIDENTIAL AND IS SUPPLIED ON THE EXPRESS CONDITION THAT IT IS NOT TO BE USED FOR ANY PURPOSE OR COPIED OR COMMUNICATED TO ANY OTHER PERSON WITHOUT WRITTEN PERMISSION FROM DART AEROSPACE USA, INC.

L Lacelle

From: Roberto Fuentes [rfuentes@dartaero.com]
Sent: September 10, 2009 11:08 AM
To: 'L Lacelle'
Subject: RE: D3846-7

I will send the existing dxf I have in file that match same as SW file to Eric. For those already cut, I thing that be ok to open new hole to match the SS wearplate. Make sure the file for water jet is updated.

Roberto

From: L Lacelle [mailto:llacelle@dartaero.com]
Sent: Thursday, September 10, 2009 8:02 AM
To: *Roberto Fuentes (*Roberto Fuentes)
Subject: D3846-7
Importance: High

Hi Roberto,
We just cut 6 D3846-7 gaskets (119), but the drain hole is ½" off, the dxf was wrong...are these still acceptable?

Thank You,
Linda Lacelle
Production Manager
Dart Aerospace Ltd